REVISION RECORD			
LTR	ECO NO:	APPROVED:	DATE:

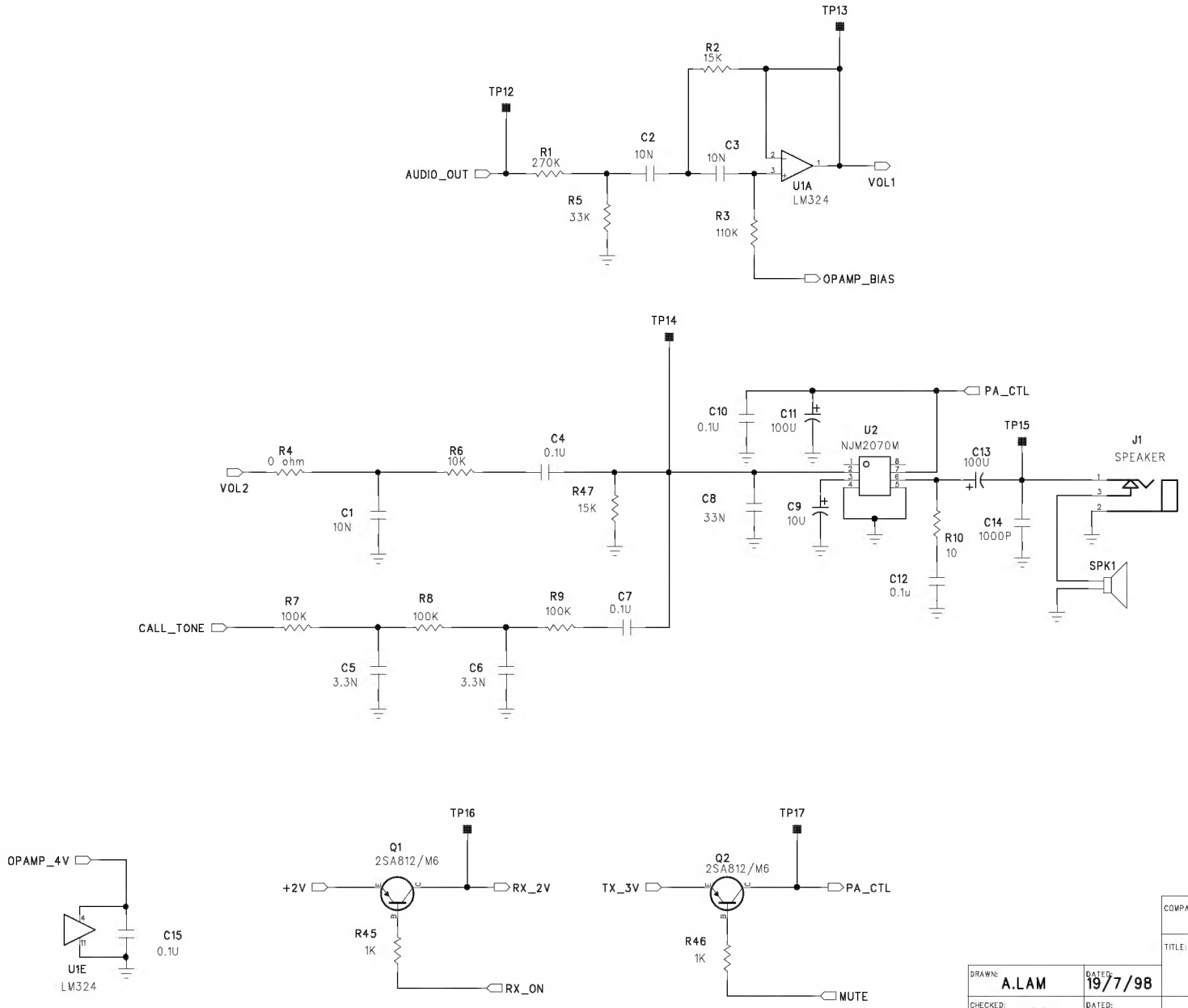

DRAWN: A.LAM	DATED: 19/7/98	COMPANY: ALBRECHT ELECTRONIC GMBH	
CHECKED: W.SCH	DATED: 4/8/98	TITLE: LPD "FROGGY" RX AUDIO	
QUALITY CONTROL:	DATED:	CODE: H244	SIZE: / DRAWING NO: FR-RXA-0.SCH / REV:
RELEASED:	DATED:	SCALE:	SHEET: 1 OF 3